BENASSI® s.p.a.

EURO 530 B

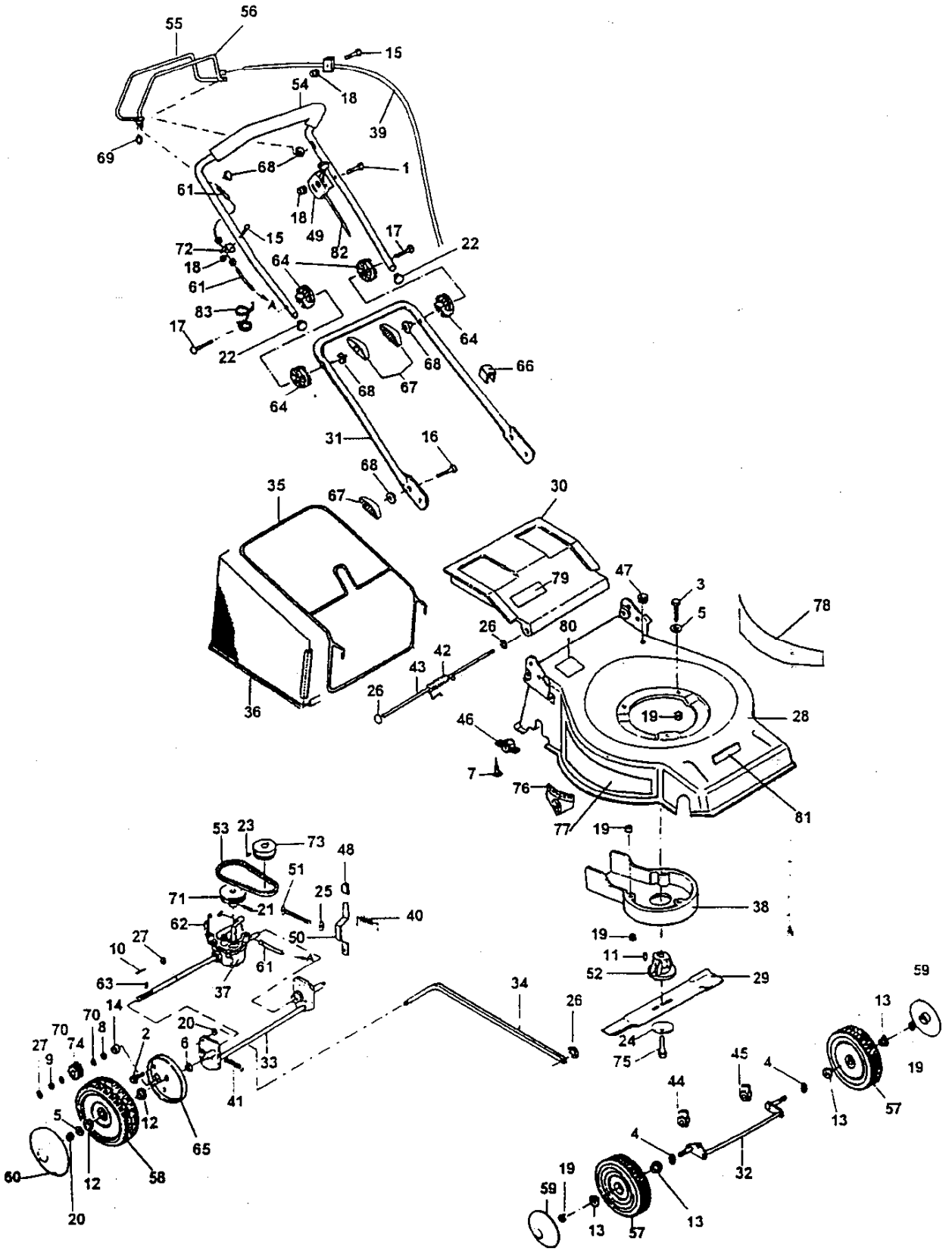

BENASSI® s.p.a.

EURO 530 T
EURO 530 B

POS.	CODICE	QTA'
1	CP030640	1
2	CP030825	1
3	CP030845	3
4	CP032813	2
5	CP032908	5
6	CP032913	2
7	CP034615	4
8	CP035903	2
9	CP035905	2
10	CP037305	2
11	CP037406	1
12	CP038226	4
13	CP038227	4
14	CP038228	2
15	CP040635	2
16	CP040850	2
17	CP040875	2
18	CP042806	3
19	CP042808	8
20	CP044708	3
21	CP045525	1
22	CP045722	2
23	CP045810	1
24	CP045910	1
25	CP046606	1
26	CP046607	3
27	CP046812	3
28	CP053001	1
29	CP053013	1
30	CP047018	1
31	CP047033	1
32	CP053048	1
33	CP053058	1
34	CP053063	1
35	CP053078	1
36	CP053083	1
37	CP053088	1
38	CP053096	1
39	CP047146	1
40	CP047191	1
41	CP047192	1
42	CP047193	1
43	CP053203	1
44	CP047212	1
45	CP047213	1
46	CP047215	2
47	CP047217	1
48	CP047236	1
49	CP047250	1
50	CP047255	1
51	CP047267	1
52	CP047272	1
53	CP047829	1
54	CP050043	1
55	CP050068	1
56	CP050073	1
57	CP050108	2
58	CP050118	2
59	CP050128	2
60	CP050133	2
61	CP050138	1
62	CP050191	1
63	CP050194	2
64	CP050212	4
65	CP050214	2
66	CP050222	1

POS.	CODICE	QTA'
67	CP050228	4
68	CP050230	6
69	CP050234	2
70	CP050238	4
71	CP050240	1
72	CP050243	1
73	CP050262	1
74	CP050298	2
75	CP050957	1
76	CP053715	1
77	CP053728	1
78	CP053729	1
79	CP053760	1
80	CP053810	1
81	CP053910	1
82	CP056143	1
83	CP047242	1